planika

INSTALLATION and USER'S MANUAL

Stella Table Automatic

G20/G25 (Natural Gas) G30/G31 (Propane-Butane/Propane)

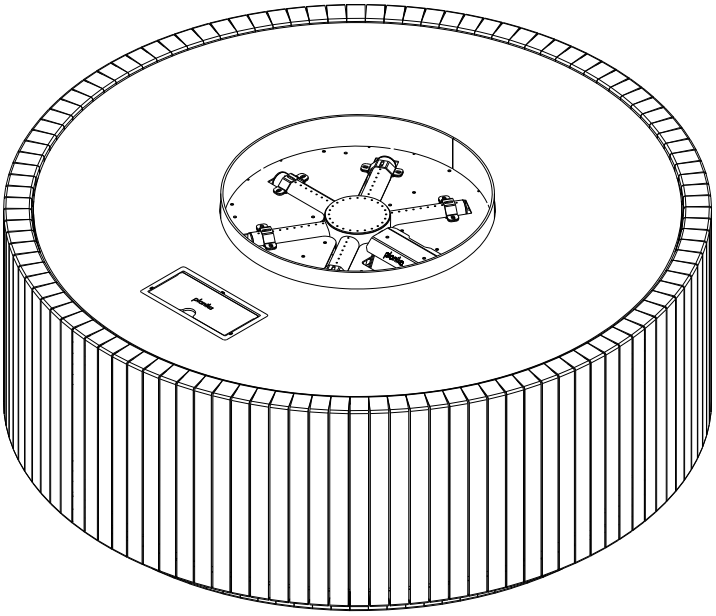

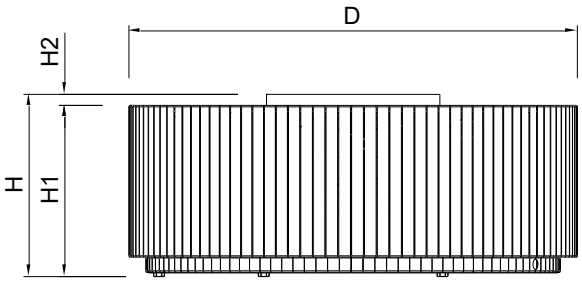

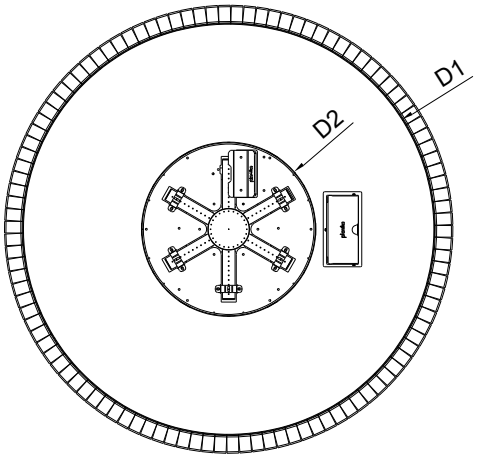

	H	H1	H2	D	D1	D2
[mm]	383	360	23	941	862	366

IT IS OBLIGATORY TO READ AND KEEP THIS INSTRUCTION MANUAL.

TABLE OF CONTENTS

1. INTRODUCTION 3
2. SAFETY INSTRUCTIONS 4
   2.1 Safety instruction regarding the use of the gas cylinders. 5
3. INSTALLATION 5
   3.1. Box contents 5
   3.2. Unboxing and installation 6
   3.3. Top plate installation 7
   3.4. Gas cylinder montage (only LPG version) 7
   3.5. Installation of the gas linkage 8
   3.5.1. Natural gas connection 8
   3.5.2. Connection and replacement of the gas cylinder (LPG version) 8
   3.5.3. Regulator replacement (LPG version) 11
4. OPERATING INSTRUCTIONS 12
   4.1. General Notes 12
   4.2. Replacing the batteries 12
   4.3. Remote control 13
   4.3.1. Switch the fire on and off 13
   4.3.2. Stand-by mode (Pilot flame) 14
   4.3.3. Flame height adjustment 14
   4.3.4. Flame height directly to minimum position 15
   4.3.5. Flame height directly to maximum position 15
   4.4. Automatic Turn Down To Pilot 15
   4.5. Automatic Shut Off 15
   4.6. Touchpad 16
5. TESTING 17
   5.1. Checking for gas leaks. 17
   5.2. Checking the flame appearance. 17
6. MAINTENANCE AND UPKEEP 17
   6.1. Testing and cleaning 17
7. TROUBLESHOOTING 18
8. SERVICE 18
9. WARRANTY 19
10. MANUFACTURER'S CONTACT DETAILS 19
11. TECHNICAL SPECIFICATION 19

1. INTRODUCTION

The Stella Table Automatic is a decorative fuel-effect gas appliances destined only for outdoor use. It is obligatory to acquaint oneself with the below installation manual and user's manual before committing to the installation and use of the Stella Table Automatic. This manual is to be kept safe for the lifetime of the device.

The Planika company designs and manufactures gas devices that meet the highest standards of quality, and safety. The device has a CE marking, which means that it meets the essential requirements of the Regulation (EU) 2016/426 relating to Devices burning gas and EN 778: 2010.

Each gas fireplace produced by Planika is subjected to factory quality control, during which it undergoes rigorous safety tests. Materials of the highest quality used for its production guarantee the user a smooth and reliable functioning of the device.

The device is delivered together with the instruction manual and assembly instructions. The assembly instructions provide the necessary information to install the device in such a way that it works properly and safely. In addition, you can find technical data about the device, information on its maintenance and possible failures that may occur, along with their possible causes and how to resolve them.

WARNING! The device must be installed by the installer who is certified and qualified specialist in gas heating and electricity and should have all the qualifications required by local law. Failing to comply with the above condition may result in voiding the warranty.

CE / UKCA Declaration of conformity

We hereby declare that both the design and construction of a gas heating device manufactured by **Planika Sp. z o.o. (with registered office at Bydgoskich Przemysłowców 10 85-862 Bydgoszcz, Poland**) meet the essential requirements contained in the Directive and the Ordinance on gas appliances.

Product: Gas device with decorative combustion effect and atmospheric burner,

Type: Galio

Regulation: 2016/426/EU

Standards: PN-EN 778: 2010; PN-EN 437:2019-03; PN-EN 60335-2-102

Model	Galio Fire Pit	GALIO 700-950	GALIO 1000-1150	GALIO 1200-1550	GALIO 1600-2150	GALIO 2200-2500
Type	VEGA/400	SIGA/01	SIGA/02	SIGA/03	SIGA/04	SIGA/05
Series of type	VEGA/400/W/M	SIGA/01/W/M	SIGA/02/W/M	SIGA/03/W/M	SIGA/04/W/M	SIGA/05/W/M

The notified body: the Oil and Gas Institute - National Research Institute (Lubicz 25 A street, 31-503 Kraków, Unit number: 1450) carried out and on 09.10.2018 issued the certificate no. GAR1450CT0048 for the above mentioned devices.

The company's quality control system guarantees that the mass-produced devices meet the essential requirements of the applicable Directives and Regulations as well as the standards contained therein. This Declaration is annulled if any modifications are made to the device without the prior written consent of Planika.

PREZES ZARZĄDU
Jarosław Dąbrowski

Brzoza 10.10.2018

Chairman of the Board

Jarosław Dąbrowski

2. SAFETY INSTRUCTIONS

- Read the instructions before using the appliance.
- Use outdoors only.
- The Stella Table Automatic should be installed and controlled annually according to the below installation manual as well as enforced national and local laws regarding gas safety (installation and use).
- One needs to assess whether the data on the product plaque complies with the local type of gas and pressure.
- Do not change the structure of the device or its sealed elements nor modify the default settings of the Stella Table Automatic.
- Do not set any additional imitation blocks nor any glowing coal fragments on the burner or in the combustion chamber.
- A CO2 or a powder fire extinguisher needs to be placed near the device.
- During the first ignition the Stella Table Automatic needs to be burnt on maximum level for a few hours in order for the elements to acquire correct temperature and for the remains of paint, lacquer and lubricant to evaporate.
- Do not move the device while it's working.
- Stella Table Automatic has been designed for decorative purposes. The surface of the Stella Table Automatic including the glass screens may get hot (up to 100 degrees Celsius) with the exception of the side walls of the appliance and the control panel. **WARNING!!!** Parts of the device that are easy to reach may be very hot. Keep children away from the device.
- Glass panels must be installed when Stella Table Automatic is in use.
- This appliance must be kept away from flammable materials during use. Do not place any combustible materials within a distance of 1 m of Stella Table Automatic and 2 m over the appliance

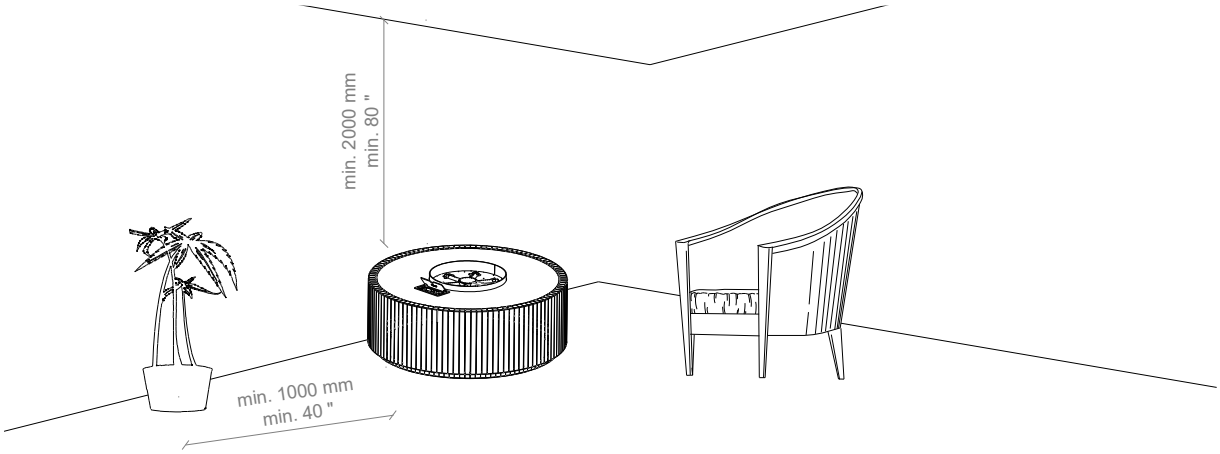

Fig. 1: Minimum distance to flammable materials

- When not being used the Stella Table Automatic is to be protected from atmospheric conditions and the main valve of the gas cylinder needs to be turned off.
- If the Stella Table Automatic is not in use for a longer period of time (e.g. winter time), we advise you to store it inside.
- Corrosion of the coating of the base of Galaxy Corten is a natural process resulting from the characteristics of the Corten steel which the fireplace is made of. It is an additional protective layer of the appliance against the negative influence of unfavorable weather conditions.
- Other parts of the Stella Table Automatic are made of stain resistant material.
- Never leave a turned on Stella Table Automatic without supervision.

- The Stella Table Automatic needs to be installed in a place inaccessible for children, unauthorised persons or animals for the direct contact with the flame or hot parts of the device to be impossible.
- In case of heavy wind the Stella Table Automatic needs to be immediately turned off and one needs to await until the heavy wind passes.
- In case of noticing any sort of gas leaks the fireplace as well as the main valve of the gas cylinder need to be turned off.
- After use turn off the gas cylinder valve.
- Salty seawater environment accelerates the corrosion process and contributes to fireplace damage

2.1 Safety instruction regarding the use of the gas cylinders.

- Use only the type of gas and pressure specified by the manufacturer.
- The gas cylinders should always be placed in a vertical position – during use and transport.
- Always store the gas cylinder in an easily accessible place to allow its immediate turn-off.
- During the installation process do not allow an open flame or any ignited object to reach the gas cylinder.
- The gas cylinder should be in a distance not shorter than 1,5 metres away from the Stella Table Automatic.
- Leaks should be found with the use of a cleaning liquid and water. If bubbles form on the surface that means that a there's an existing leak.
- Always use a pressure regulator between the gas bottle and the device. Replace the pressure regulator every 5 years. The allowed pressures are: 30mbar, 37mbar (recommended), 50 mbar. Use only regulators complying with the European EN16129 Norm.
- Use only approved and certified gas connection linkage. Replace the linkage every 2 years.
- The elastic linkage connecting gas to the fireplace is to be led away from sharp edges and hot surfaces. Refrain from bends and twists of the elastic connection on its full length.
- Remember that the LPG bottle should be stored in a well-ventilated place. LPG gas is heavier than air and its accumulation near the bottom surface may generate an explosive mixture.
- The housing in which the LPG bottle is (optionally) placed needs to have an appropriate ventilation. The housing needs to have an upper ventilation slot above the top of the bottle (of an area min 1/100 of the area of the base of the housing) and a lower ventilation slot (of an area min 1/50 of the area of the base of the housing).
- The gas cylinder needs to be shut if the fireplace is not being used.
- Filling the gas cylinders is to be commissioned to certified gas filling stations.
- Replacement of empty cylinders for full ones is to be conducted only in authorised locations

3. INSTALLATION

3.1. Box contents

- 1x complete Stella Table Automatic gas fireplace
- 1x round top plate
- 1x remote control and 2x AAA Batteries
- 1x Touch panel (installed)
- 4x AA Batteries
- 1x package of decorative stones
- 1x 4 metre rubber gas linkage – installed (only LPG version)
- 1x pressure regulator (37mbar) – installed (only LPG version)
- 1x installation manual and user's manual

3.2. Unboxing and installation

- The contents of the boxes need to be carefully unwrapped from the foam foil.
- Remove the bags with decorative stones from the burner reservoir and place them away from it.
- Remove the Styrofoam placed on the unit.
- Check the completeness of the elements with the contents list.
- Make sure that the device nor its elements weren't damaged during the transportation (if they were, notify the supplier).
- Place Stella Table Automatic on a flat, paved surface outside of the building, preferably on the place of final installation. Leave sufficient space on the side of the appliance where control panel is located (minimum 1 m).
- The decorative stones are to be scattered evenly around the reservoir to completely cover the burner of the fireplace.

WARNING!!! The stones may not cover or be placed inside the device protecting the ignition unit

Fig. 2 – Decorative stones location

- In the case of Stella Table Automatic powered with natural gas, to obtain the optimum image of the flame, cover the burner with a single layer of decorative stones leaving some spaces uncovered of approximately every 10 cm

Fig. 3 – Decorative stones location on burner

- If all the points were completed according to the instruction the gas bottle can be now connected
- The appliance must be used with decorative stones supplied by the manufacturer. Use without stones is prohibited.

3.3. Top plate installation

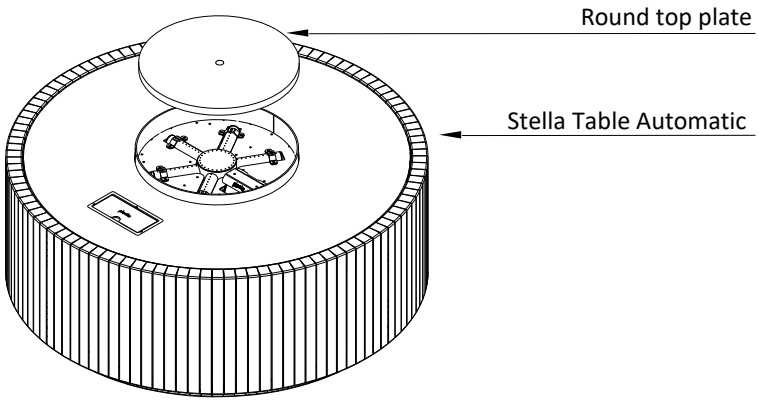

Fig. 4 – Top plate assemble

When the fireplace is turned off, you can cover its hearth with a dedicated top. Use the round top by placing it centrally on the hearth (the fireplace has additional stands to hold it)

3.4. Gas cylinder montage (only LPG version)

- The gas linkage attached to the device allows to place the gas bottle maximally 3 meters away from the connected control panel, however it cannot be placed nearer to the device than 1,5 meters.

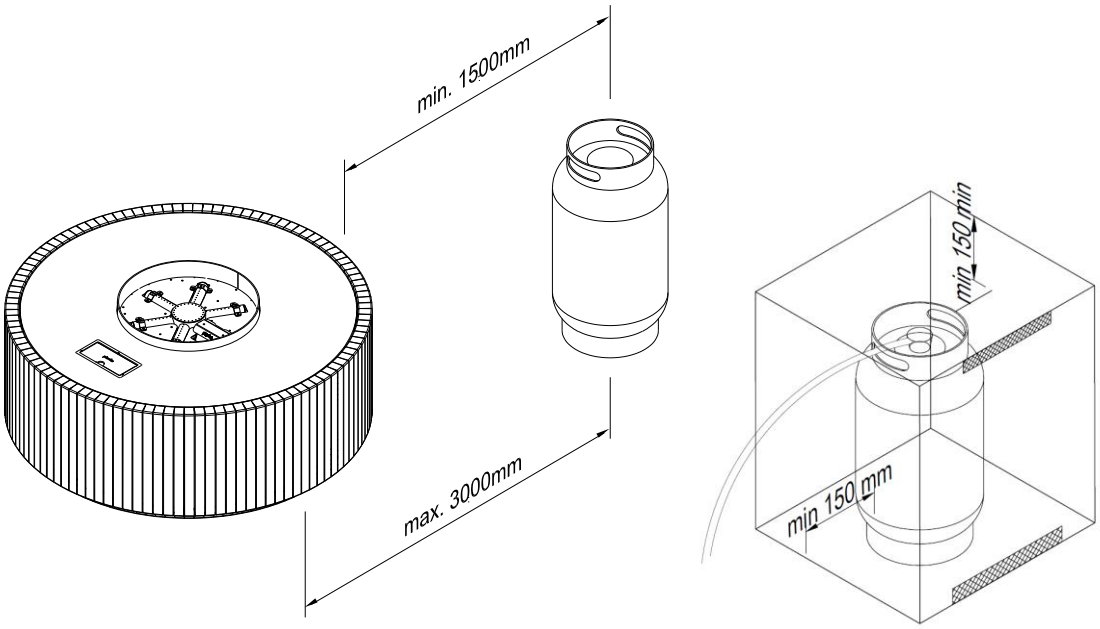

Fig. 5 – Gas cylinder distance and housing for gas cylinder

- The optional housing for the gas bottle cannot be airtight and has to be correctly ventilated. The housing needs to have an upper ventilation slot above the top of the bottle (of an area min 1/100 of the area of the base of the housing) and a lower ventilation slot (of an area min 1/50 of the area of the base of the housing). The dimensions of the housing may vary to accommodate different types and dimensions of the gas bottles however they also have to be sufficient for hassle-free installation of the gas bottle.

3.5. Installation of the gas linkage

WARNING!!! The montage and service needs to be conducted by a qualified professional, a company or the gas supplier.

Before proceeding with the connection of the gas cylinder to the fireplace all activity regarding the correct placement and installation of the Stella Table Automatic needs to be already performed. Place the gas linkage away from hot or sharp edges and make sure it is not twisted.

3.5.1. Natural gas connection

First and foremost, make sure that the connecting device is designed to supply a gas suitable for the type placed in the gas installation. All necessary information regarding the desired parameters of the gas are found on the rating plate of the device. Before connecting the gas supply, it is necessary to blow them to remove any remaining metal filings and other contaminants from inside. Automatic gas control system should be protected from moisture and dust. These factors may cause irreparable damage to the individual components. The pipe supplying gas to the fireplace should be equipped with a ball valve with a recommended diameter of 1/2 inch. The individual elements of the gas installation cannot be sealed using Teflon tape or PTFE tape.

The gas valve on the gas pipe must be installed in accordance with applicable national regulations. Before connecting the gas, make sure that the gas pipes and connections have no dirt. Gas connection is finished with external thread 3/8 ". Regarding gas connection, the following requirements shall apply:

• You must use the gas pipe with the correct dimensions, so there is no pressure loss.

• Ball gas valve should be installed in an easily accessible place and have the necessary CE mark.

3.5.2. Connection and replacement of the gas cylinder (LPG version)

The Stella Table Automatic is delivered together with an elastic gas linkage which, on one end is connected to the valve of the device and on the other end to the 37mbar regulator (in the twist-on version) ready to be connected to the gas cylinder. One needs to control the expiry date of both of the regulator as well as the gas linkage and if necessary (for instance: broken, cut, scratched linkage) replace the components for new ones according to national standards and norms.

The Stella Table Automatic can use metal or steel bottles or composite bottles filled with propane-butane gas or propane gas. This device features a twist-on regulator with current pressure of 37mbar. It can be replaced into a regulator with a quick-release with pressure regulator of 37 mbar.

WARNING!!! NEVER use an unstable gas connection or a regulator for other gas pressure.

Gas cylinders have two types of connectors:

- Twist-on connection: The most important thing is the black seal. Always check if the seal is present and that it hasn't been damaged during the gas cylinder replacement. Some connections have a knob to fasten them in place while others require the use of a wrench. Tighten securely (left thread). Using the tool pay attention not to fasten the connection too tightly as this may damage the seal.
- Quick-release: For this type of connection no tool is required. On/off regulation of gas connection is made through a switch on the regulator or on a special connector. In case of using a connector with a thread regulator of an old type put a special emphasis on checking if the connecting nut has been tightly fastened with the help of wrench.

Gas cylinder connection

Twist-on connection	Quick-release
1. Check if the bottle valve is TURNED OFF turning it clockwise 2. Remove the protection tip and store it for later use.	1. Remove the protection tip. Do not use any tools, leave the tip hanging freely.
3. Before making the connection check if the black seal is not damaged. 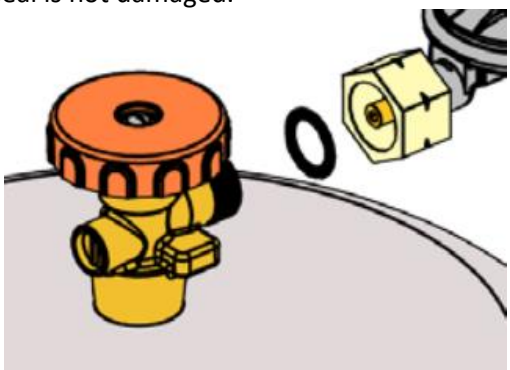	2. Make sure all the taps on the gas device are closed and if the switch in in the OFF position. 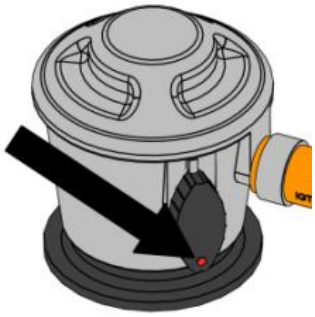
4. Fit the connecting nut to the cylinder with the use of a correct wrench or the connecting knob. (left thread) Do not allow the gas bottle connectors to be fastened too tightly. 	3. Place the quick-release regulator on the valve and press it down hard. If the switch is correctly turned off you will hear a characteristic click. 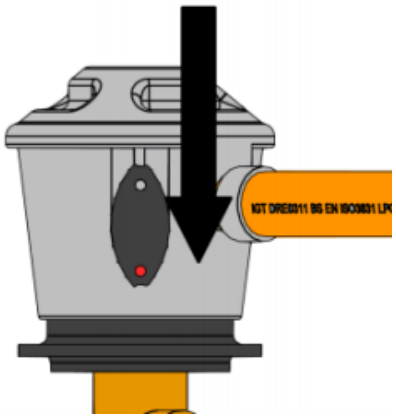
5. When the gas flow is required turn the valve of the bottle counter-clockwise. 	4. To let the gas flow in turn the switch into the ON position (or into the flame image). 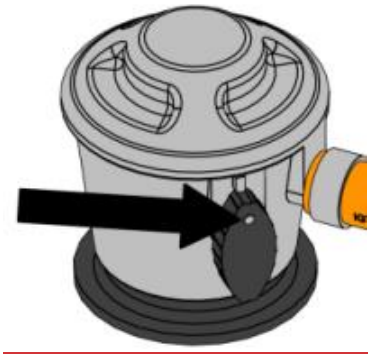

- Place the gas bottle in a correct distance from the fireplace (min 1,5 metres away).
- **WARNING!!!** Check the gas connection for leakage. If anything suggests a leak is present (for instance a characteristic gas smell) close the gas bottle valve and under no circumstances turn the device on before removing the leak. (See point 5.1).
- After removing the leak one may open the gas bottle valve again.

Disconnection of the gas cylinder

Twist-on connection	Quick-release
1. Turn off the Stella Table Automatic – put it into the OFF position. The main and pilot burner need to be turned off.	
2. Turn the bottle valve into the OFF position (clockwise). 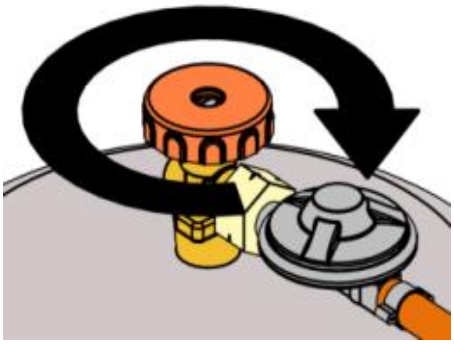	2. Turn the switch into the OFF position.
3. DO NOT unmount the regulator (or connecting nut) when the bottle valve is open. 4. TAKE OFF the regulator (or the connecting nut) with the use of a wrench or a connecting knob.	3. Take off the quick-release regulator by pressing the switch horizontally and simultaneously pulling the whole regulator upwards. 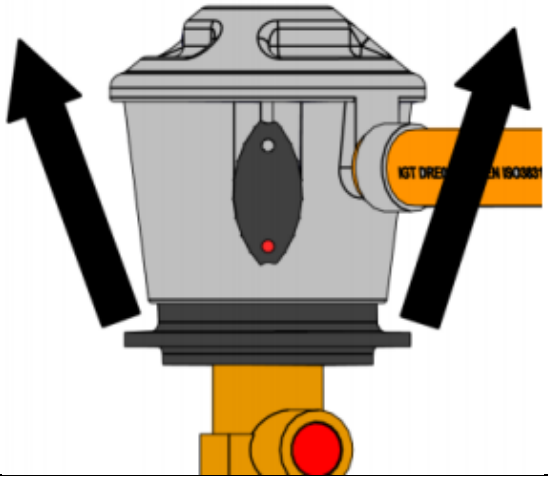
5. REPLACE the linkage closer or cap on the empty or partially full bottle if it's not being used.	4. REPLACE the tightening cap on an empty or partially full bottle if it's not being used.

3.5.3. Regulator replacement (LPG version)

1. You always need to use a pressure regulator between the gas cartridge and the device. Replace the pressure regulator every 5 years. Allowed pressure: 29 mbar. Use only the regulators that comply with the EN 417 European Norm.
2. Turn off Moon by setting „OFF" position.
3. Disconnect the regulator from the gas cylinder

4. Cut off attached pressure reducer or go to step 4.1. if you have pressure reducer with clamp connection or go to step 4.1.1. if you have pressure reducer with thread connection.	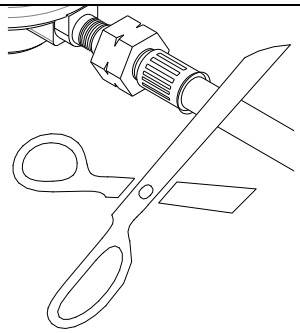
5. Replace the regulator to new one with clamp connection by attaching new linkage on the stub of regulator.	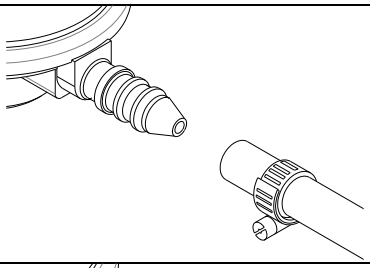
6. Move the clamp into the stub	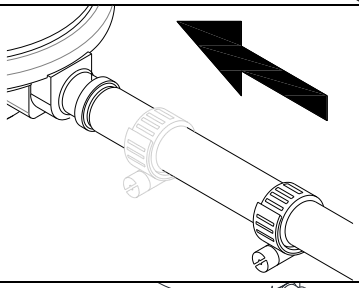
7. Tighten the clamp with screwdriver (philips) or a flat wrench. WARNING! In the event of visible damage on the clamp, replace it for a new one.	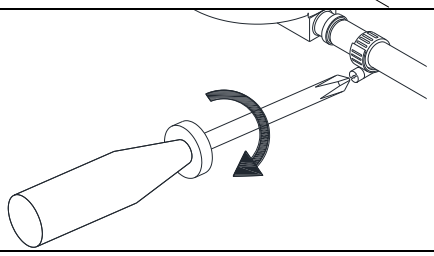

4.1. Loosen the metal clamp with the use of a screwdriver (philips) or a flat wrench.	4.1.1 Or loosen the reducer using HEX
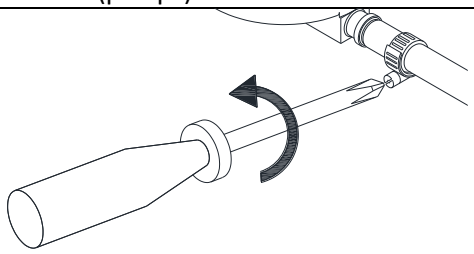	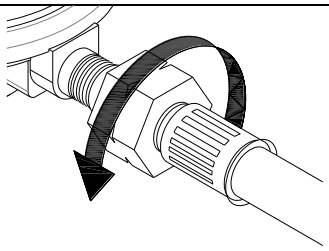
4.2. Move the clamp away from the stub of gas regulator and go to step 5	4.1.2. Replace the reducer with new one and screw it back with the gas hose.
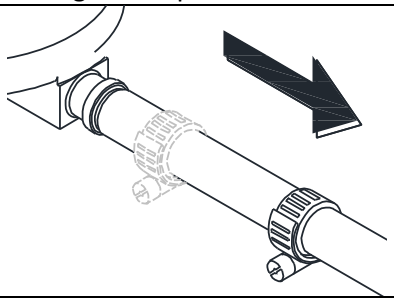	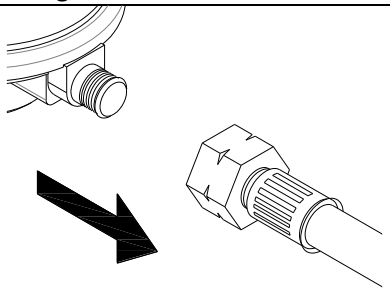

4. OPERATING INSTRUCTIONS

4.1. General Notes

The Stella Table Automatic has a remotely control valve with a built-in ignition for the pilot flame. The flame height of the main burner may be appropriately regulated by remote control (optionally) or Touch Panel.

Fig. 6 – Hand-held transmitter

The appliance is supplied ready for operation, with the remote control pre-paired to the receiver. If the remote control is lost, damaged, or loses connection with the fireplace, refer to the Service section of this manual. If the issue persists, contact Technical Support.

Fig. 7 – Touch Panel

4.2. Replacing the batteries

If the batteries are inserted incorrectly, the electronics or drive may be irreparably damaged. Only replace the batteries when the appliance has been completely switched off.

NOTE: If the appliance is equipped with a 230 VAC connection, no batteries are present in the receiver or in battery box.

- The batteries are placed in battery holder located under the flap on top plate of the fireplace.

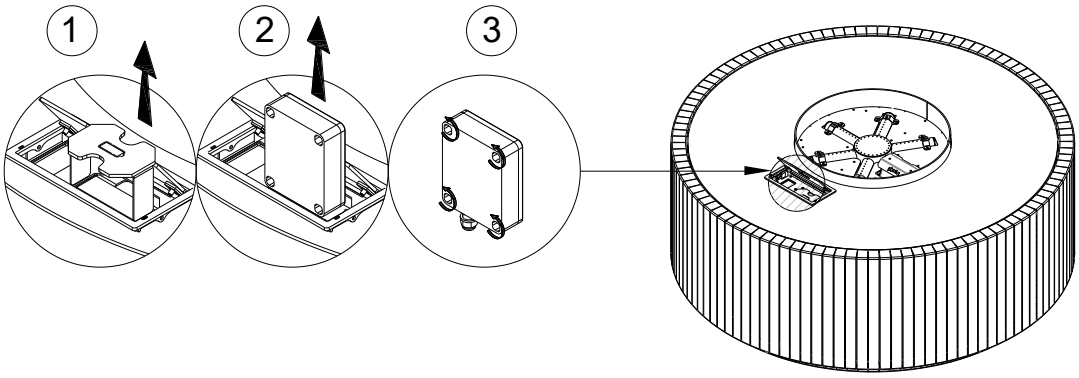

Fig. 8 – Replacing the batteries

- To replace the batteries, open the flap on the top plate of the burner and pull out the cover then pull out battery box and unscrew its cover. **WARNING!** Remember about proper polarization of the batteries while replacing.
- After replacing the batteries make the same steps in opposite.

4.3. Remote control

Stella Table Automatic can be operated by radio remote control. This comprises a hand-held transmitter and a receiver. The receiver is part of the gas control block assembly.

- Electrical connections and batteries:
  - Hand-held transmitter: 2x 1.5V AAA battery
  - Receiver: 4x1.5V AA battery or 6 VDC
- **WARNING!** Without using a mains adapter, battery replacement is recommended at the beginning of each heating season. Old or dead batteries should be removed immediately. If left in the unit the batteries can overheat, leak, and / or explode. Do NOT expose batteries (including during storage) to direct sunlight, excessive heat, fire, moisture, or severe impact. Each of these conditions can cause the batteries to overheat, leak, and / or explode. Batteries must be kept within their recommended temperature limits. Ambient battery temperature range: 32 °F to 131 °F[0 °C to 55 °C].
- The hand-held transmitter batteries have a service life of approx. one year. We recommend you use alkaline batteries. Rechargeable batteries are not permitted.
- To replace batteries:
  - Open the cover on the back of the remote control.
  - Remove the batteries from the battery compartment.
  - Place two new 1.5V batteries (LR03 or AAA type) as indicated in the battery compartment.
  - Close the cover

4.3.1. Switch the fire on and off

Before operating make sure MANUAL knob on the GV60 valve is in the **ON**, full counter clockwise position.

WARNING! When the pilot light is ignited, the motor turns automatically to maximum flame height. If the pilot flame goes out for any reason, wait for 5 minutes before attempting to re-light it. If the pilot does not stay lit after several tries, turn the main valve knob to **OFF.**

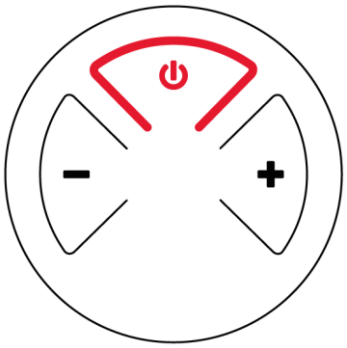

1. Open the valve of the gas cylinder (or gas supply valve in the gas pipe).

2. Press and hold the ⏻ button until two short beeps confirms the start sequence has begun; release button.

3. Main gas flows once pilot ignition is confirmed.

4. Press and hold ⏻ button to turn **OFF** the fire.

- This can take few seconds to ignite to pilot flame especially when you have replaced and installed a new LPG gas cylinder.
- If the pilot light does not ignite after 3 ignition attempts close the gas tap and contact the fitter.

- Once the pilot light is burning, the main burner must ignite within 10 seconds automatically. If this does not happen, immediately close the gas tap and warn the fitter.
- If the main burner ignites with a pop immediately close the gas tap and warn the fitter.
- If the appliance is not to be used for some time, please close the gas supply valve in the gas pipe (or valve of the gas cylinder).

WARNING! If the pilot flame goes out for any reason wait for 5 minutes before attempting to re-light it.

WARNING!!!

- **Under conditions of increased humidity (rain, breeze, fog, dew, etc.), there may be some temporary problems with switching on the fireplace. This is a normal phenomenon associated with the dampening of the ignition element.**
- **Before switching on the fireplace, wait until the ignition element has dried completely.**
- **You can speed up this process by blowing the pilot flame with compressed air to remove the accumulated moisture. The properly fired pilot flame consist of 3 smaller parts.**

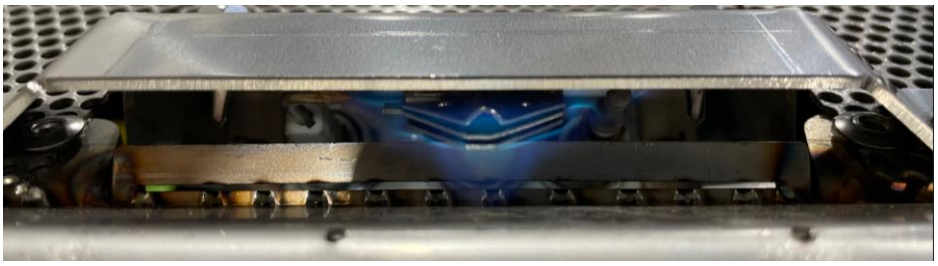

Fig. 9 – Ignition elements

4.3.2. Stand-by mode (Pilot flame)

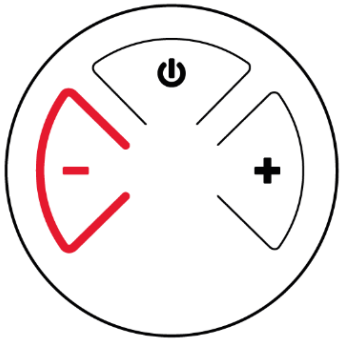

Press and hold **„-“** button to set appliance to pilot flame. Pilot flame remains burning (standby position).

4.3.3. Flame height adjustment

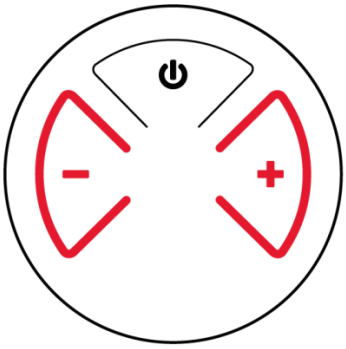

After ignition, the burner automatically sets the flames to the maximum height.

- To decrease flame high or to set appliance to pilot flame, press and hold **„-“** button.
- To increase flame high press and hold **„+“** button.

4.3.4. Flame height directly to minimum position

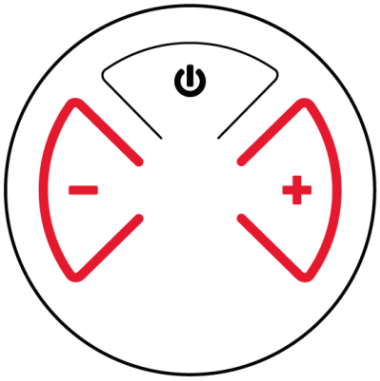

Pressing the „-“ button twice automatically decreases the flames to the LOW position

NOTE: Flame goes to high fire first before going to low fire.

4.3.5. Flame height directly to maximum position

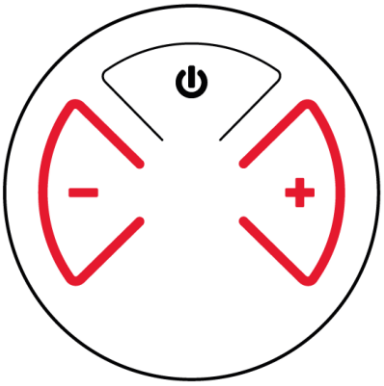

Pressing the „+“ button twice automatically increases the flames to the HIGH position

Press and hold „+“ button to increase the flame level and to turn on the burner from the stand-by position.

NOTE: If you turn on the burner by pressing the button, it must ignite within 10 seconds. If this does not happen, immediately close the gas tap and warn the fitter.

4.4. Automatic Turn Down To Pilot

3 Hour No Communication Function

The valve will turn to pilot flame if there is no communication between handset and receiver for a 3 hour period. The fire will continue to function normally when communication is restored.

Receiver Overheating

- Powered by mains adapter: The valve turns to pilot flame if the receiver temperature is higher than 176 °F (80 °C). If batteries are installed in the receiver in this configuration the temperature must not exceed 60 °C.
- Powered by batteries and/or connected to the V module: The valve turns to pilot position if the temperature in the receiver is higher than 140 °F (60 °C).

NOTE: When the receiver temperature is below 140 °F (60 °C), the main burner can be turned ON manually.

4.5. Automatic Shut Off

Countdown Timer

At end of countdown time period, the fire shuts off. The Countdown Timer only works in Manual, Thermostatic, and Eco Modes. Maximum countdown time is 9 hours and 50 minutes.

Low Battery Receiver

With low battery power in the receiver the system shuts off the fire completely. This will not happen if the power supply is interrupted.

On-Demand Pilot

- This green feature eliminates gas energy consumption during extended appliance inactivity. When the appliance is inactive for an extended period of time the system automatically extinguishes the pilot. This feature helps the consumer realize cost benefits by automatically eliminating energy consumption during non-heating months and limited use.
- The programmed length of inactivity to activate the system is specified by the appliance manufacturer and cannot be altered in the field.

4.6. Touchpad

Fig. 10 – Touch panel

To Turn ON Appliance

- Press ON-OFF button until two short beeps confirm the start sequence has begun; release button.
- Once pilot ignition is confirmed, there is main gas flow.

Standby Mode (Pilot Flame)

- Press and hold DOWN (small flame) button to set appliance at pilot flame.

To Turn OFF Appliance

- Press ON-OFF button.

Flame Height Adjustment

- Press and hold UP (large flame) button to increase flame height.
- Press and hold DOWN (small flame) button to decrease flame height or to set appliance at pilot flame.

5. TESTING

WARNING!!! NEVER TURN ON THE DEVICE IF THE CHARACTERISTIC SMELL OF GAS IS PERCEPTIBLE.
If you smell gas during the operation of the fireplace turn off the device immediately and cut off the gas supply from the gas cylinder by shutting its valve.

5.1. Checking for gas leaks.

- Check if all connections are airtight.
- To do that apply all connections with soapy water (or water with another foamy substance) or with a professional spray for leak detection.
- If air-bubbles are present that means the connection has a leak.
- Remove the leaks in the identified spaces.
- Check for leaks once again.
- After the inspection dry the inspected connections.
- The device may only be used again after all leaks are removed.
- **If the problem happens again please contact the dealer.**

5.2. Checking the flame appearance.

- Burn the Stella Table Automatic on max flame height and check the appearance of the flame.
- The flame should be linear and evenly placed on the whole length of the main burner.
- If visible gaps are present or there are substantial differences in flame height turn off the fireplace and after the device is cooled adjust the placement of decorative stones in such a way for them to be evenly placed on the whole surface of the main burner.

WARNING!!! Remember not to cover the cover, which houses the ignition and the pilot flame, with stones.

- Turn on the fireplace and check the appearance of the flame once again.

6. MAINTENANCE AND UPKEEP

We recommend cleaning the pilot flame and the main burner unit before the device is started again after its been removed from storage during the winter period.

6.1. Testing and cleaning

Please check and clean if necessary:

- The main burner - if necessary, remove broken parts of stones and the existing dust.
- Pilot burner and thermo-couple (if necessary, remove the existing sediment). In the event of visible damage contact your dealer.
- Igniter - gap between igniter and pilot flame should not be bigger than 5 mm.
- Glass screens – check for dirt smudges or possible scratches or cracks. If cracks are present replace the glass screen for a new one. To conduct this contact your dealer.
- Gas linkage and pressure regulator (in case their expiry date is invalid replace these ancillaries for new ones).
- If you encountered problems with the regulator, gas linkage, burner or regulation valves do not try to fix these parts. Contact a sales person, an authorised service or an importer in order to acquire spare parts. To ensure the device is working efficiently use only original spare parts.

7. TROUBLESHOOTING

Warning! Montage, upkeep and service need to be conducted by a qualified professional with appropriate qualification, an appropriate company or the gas supplier.

PROBLEM	POSSIBLE CAUSE	CORRECTIVE ACTION
SMELL OF GAS	**CLOSE THE VALVE ON THE GAS CYLINDER IMMEDIATELY. DO NOT USE THE DEVICE UNTIL LEAKS HAVE BEEN REMOVED.**	
Leak detected at cylinder, regulator or other connection.	1. A loose regulator linkage. 2. Leak in the gas linkage, in the regulator or on the gas knobs.	1. Tighten and test it. 2. Report this issue to service.
Burner does not ignite	1. The bottle is empty. 2. Igniter linkage is not connected. 3. No ignition spark. 4. The igniter electrode is placed incorrectly opposite the igniter. 5. Gas nozzles are blocked. 6. Gas linkage is twisted. 7. Pressure regulator link is loose.	1. Replace Gas Cylinder. 2. Connect the igniter linkage. 3. Replace igniter. 4. Realign electrode and clear any surrounding debris from area. 5. Unmount burner, clean the nozzle. 6. Straighten the linkage. Keep the linkage away from the housing. 7. Tighten the link. Check for leaks.
Igniter Not Working	1. Ignitor wire not connected. 2. Electrode misaligned on pilot burner 3. Igniter malfunction	1. Ensure pilot electrode wire is connected. 2. Realign electrode and clear any surrounding debris from area. 3. Replace Igniter
Low efficiency, „cracking" sounds	1. The bottle is empty. 2. The nozzles of the burner are blocked.	1. Replace Gas Cylinder. 2. Unmount the burner, clean the nozzle.
Thumping sounds made by the regulator.	The cylinder valve has opened rapidly.	Unfasten the bottle valve slowly.
A vivid/ bright orange and smoky flame of the burner.	Holes blocked in the apparatus producing the gas and air mixture.	Unmount the burner and clean/ unblock the apparatus' holes.

8. SERVICE

In case of fireplace issues, please contact our service department with answers on below questions.

- Please provide a serial number of the fireplace and invoice number to verify the warranty period
- Please provide pictures / video material showing off existing problem
- Are you able to hear / see a spark ticking, responsible for ignition of the pilot flame
- Are you sure that in the gas connection is no air left, gas cylinder is full and opened
- What type of gas are you using for supplying the fireplace
- Have you tried to replace the batteries in fireplace (4xAA) and in the remote control (2 AAA)
- If the fireplace is freshly installed or was not used for a longer period of time the first burnout (also after gas cylinder replace) might take even up to 10 tries

Fig. 11 – Serial number location

9. WARRANTY

Planika Sp. z o.o. grants the Client guarantee of quality for the smooth operation of the goods specified on the sales document. The warranty is determined for a given period from the date of purchase (based on the warranty card together with the receipt of purchase). The warranty period starts at the moment of purchase of the original product by the first end user. Product may consist of several separate parts and different parts may be covered by a different warranty periods. The manufacturer gives 2 year warranty from date of purchase an insert for its smooth operation. Fireplace sealing is covered by warranty for a period of 1 year from date of purchase of the device. Guarantee does not cover: decorative elements and glass. The use of the fireplace insert and operating conditions must be in accordance with the user manual. The basis for the free repair covered by warranty is a warranty card. Warranty Card will expire without a date, stamps, signatures, as well as the amendments made by unauthorized persons. Customer entitlement under the guarantee will expire automatically: after the warranty period. Any damages caused by improper handling, storage, of poor maintenance, incompatible with the conditions laid down in the manual and due to other reasons not due to the fault of the manufacturer, will void the warranty. In the event of a complaint, always contact your dealer. Supplier will contact the company Planika, if it deems it necessary. Factory Warranty is valid for 2 years from the date of purchase. Details of the warranty are available on the https://www.planikafires.com/warranty-cards/

10.MANUFACTURER'S CONTACT DETAILS

Company Name: **Planika Sp. z o.o.**

Address: **Bydgoskich Przemysłowców 10**

Telephone: **+ 48 52 364 11 60**

11. TECHNICAL SPECIFICATION

Gas category		I3B/P(30); I3P(30); I3+(28-30/37)	I3B/P(37); I3P(37);	I3B/P(50); I3P(50);	I2E(20); I2H(20);
Device type		A1 Outdoor	A1 Outdoor	A1 Outdoor	A1 Outdoor
Reference gas		G30/G31	G30/G31	G30/G31	G20
Net input (Hi) Stella Table Automatic		12,6	12,6	12,6	7,9
Input pressure	mbar	30	37	50	20
Gas flow at 15°C and 1013 mbar Stella Table Automatic	m^3/h	-----	-----	-----	0,71
Gas flow at 15°C and 1013 mbar Stella Table Automatic	kg/h	0,98	0,98	0,98	-----
Nozzle of the main burner Stella Table Automatic	mm	2,0	2,0	2,0	2,4
Pilot unit		G30-ZP2M-L	G30-ZP2M-L	G30-ZP2M-L	G30-ZP2M-L
Gas control valve		Mertik GV 60	Mertik GV 60	Mertik GV 60	Mertik GV 60
Gas linkage		Ø9mm	Ø9mm	Ø9mm	External ⅜"

SELLER	
Name:	
Address:	
Tel/fax:	
Date of sale:	Seller’s seal and signature
BUYER	
Name:	
Address:	
Tel/fax:	
Date of purchase:	
The gas fireplace should be installed by a qualified Installer in accordance with the applicable national building regulations and in accordance with the guidelines contained in the Installation and User's Manuals.	
I hereby declare that having read the User's Manual and the Guarantee Conditions. Date and legible signature of the Buyer	
INSTALLER	
Name:	
Address:	
Tel/fax:	
Date of commissioning:	
I hereby declare that the gas fireplace installed by my Company has been installed in accordance with the applicable building regulations and in accordance with the guidelines contained in the Installation and User's Manuals. The installed gas fireplace is ready for safe operation.	Installer’s seal and signature

REGISTER OF APPLIANCE INSPECTIONS	